DMN Series

The DMN series is designed with an extremely low profile and a high resolution encoder optimized to achieve high dynamic motion, high torque and high precision.
The DMN series is a perfect fit for industries that require high precision but less force.

- Outer rotating structure
- Space saving with Low profile design
- Absolute Encoder
- Maximum torque: 4.2~39.6 Nm

Model Description

Part numbers of motor											Part numbers of mechanical								
DMN	7	1	-	B	0	S	N	0	0	-	S	0	-	1	S	S	-	0	-	0

- Series: DMN: Low profile type
- External diameter: 7:Φ180mm; 9:Φ230mm
- Rotor height: 1:10mm; 3:30mm
- Encoder: B:20 bits (Absolute)
- Hall sensor: 0:Without hall sensor
- Winding: S: Standard
- Thermal Sensor: N : Without sensor
- IP level: 0 : IP40
- Function code
- Axial/Radial runout: S: 30um/30um (Standard); P: 5um/15um
- Accuracy compensation: 0: Without mapping
- Cable length: 1: 0.3m (absolute encoder)
- Connector: S: Standard
- Positioning pin: S: Standard (Define by Drawing)
- Brake: 0: Without brake
- Reserved

DMY Series

The DMY series is designed with an intergrated, high resolution feedback system which is optimized to achieve high dynamic motion, high torque and high precision.
The DMY series is a perfect fit for indusries that require high precision.

- Outer rotating structure
- Absolute encoder
- High dynamic, torque and precision
- Maximum torque: 12~300 Nm

Model Description

Part numbers of motor											Part numbers of mechanical								
DMY	6	3	-	B	0	S	N	0	0	-	S	0	-	1	S	S	-	0	-	0

- Series: DMY: External rotary table
- External diameter: 6:Φ170mm; A:Φ270mm
- Rotor height: 3:30mm; 4:40mm; 5:50mm; 8:80mm; A:100mm
- Encoder: B:20 bits (Absolute)
- Hall sensor: 0:Without hall sensor
- Winding: S: Standard
- Thermal Sensor: N : Without sensor
- IP level: 0 : IP40
- Function code
- Axial/Radial runout: S: 30um/30um (Standard); P: 5um/15um
- Accuracy compensation: 0: Without mapping
- Cable length: 1: 0.3m (absolute encoder)
- Connector: S: Standard
- Positioning pin: S: Standard (Define by Drawing)
- Brake: 0: Without brake
- Reserved

HIWIN®

DMY/DMN

Absolute Encoder Direct Drive Motor

HIWIN®

HIWIN MIKROSYSTEM CORP.
No.6, Jingke Central Rd.,
Taichung Precision Machinery Park,
Taichung 40852, Taiwan
Tel: +886-4-23550110
Fax: +886-4-23550123
www.hiwinmikro.tw
business@hiwinmikro.tw

Global Sales And Customer Service Site

HIWIN GmbH
OFFENBURG, GERMANY
www.hiwin.de
www.hiwin.eu
info@hiwin.de

HIWIN Schweiz GmbH
JONA, SWITZERLAND
www.hiwin.ch
info@hiwin.ch

HIWIN KOREA
SUWON · CHANGWON, KOREA
www.hiwin.kr
info@hiwin.kr

HIWIN JAPAN
KOBE · TOKYO · NAGOYA · NAGANO · TOHOKU · SHIZUOKA · HOKURIKU · HIROSHIMA · FUKUOKA · KUMAMOTO, JAPAN
www.hiwin.co.jp
info@hiwin.co.jp

HIWIN s.r.o.
BRNO, CZECH REPUBLIC
www.hiwin.cz
info@hiwin.cz

HIWIN CHINA
SUZHOU, CHINA
www.hiwin.cn
info@hiwin.cn

HIWIN USA
CHICAGO, U.S.A.
www.hiwin.com
info@hiwin.com

HIWIN SINGAPORE
SINGAPORE
www.hiwin.sg
info@hiwin.sg

Mega-Fabs Motion Systems, Ltd.
HAIFA, ISRAEL
www.mega-fabs.com
info@mega-fabs.com

HIWIN Srl
BRUGHERIO, ITALY
www.hiwin.it
info@hiwin.it

The specifications in this catalog are subject to change without notification.

©2020 FORM MR02DE01-2003
(PRINTED IN TAIWAN)

Product Dimension

DMY6 Series

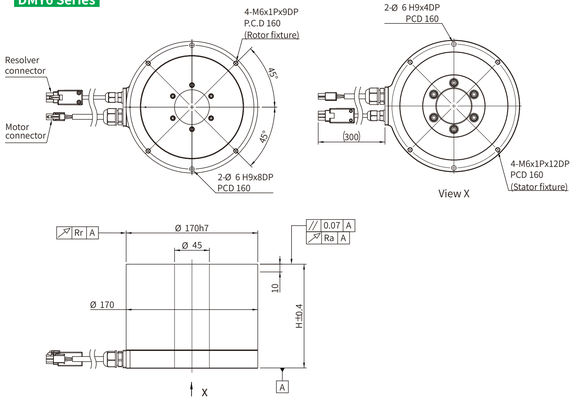

DMY6 Series	Symbol	Unit	DMY63-B0	DMY65-B0	DMY68-B0
Continuous torque	T_C	Nm	8	16	24
Continuous current	I_C	A_{rms}	3.8	3.8	3.8
Peak torque (Within 1s.)	T_P	Nm	24	48	72
Peak current (Within 1s.)	I_P	A_{rms}	12	12	12
Torque constant	K_t	Nm/A_{rms}	2.13	4.26	6.39
Electrical time constant	T_e	ms	5.7	6.3	6.5
Resistance (line to line at 25°C)	R_{25}	Ω	2	3.1	4.38
Inductance (line to line)	L	mH	11.4	19.4	28.26
Number of poles	2_p		16	16	16
Back emf constant (line to line)	K_v	$V_{rms}/(rad/s)$	1.2	2.5	3.7
Motor constant (line to line at 25°C)	K_m	$Nm/\sqrt{W}$	1.2	2	2.5
Thermal resistance	R_{th}	K/W	1.7	1.1	0.8
Nominal input voltage		V_{DC}	500(600[1])		
Inertia of rotating parts	J	kgm^2	0.019	0.026	0.033
Mass of motor	M_m	kg	7.7	10.7	14.7
Max. axial load	F_a	N	3700	3700	3700
Max. moment load	M	Nm	60	60	60
Max. speed		rpm	500	500	400
Resolution[1]		p/rev	1048576		
Repeatability		arc-sec	±5		
Accuracy		arc-sec	±25		
Axial runout	R_a	mm	0.03(0.005[1])		
Radial runout	R_r	mm	0.03(0.015[1])		
Height	H	mm	109.5	134.5	159.5

Note: [1] Optional
* All the specifications in the table are in ±10% of tolerance except dimensions.

DMYA Series

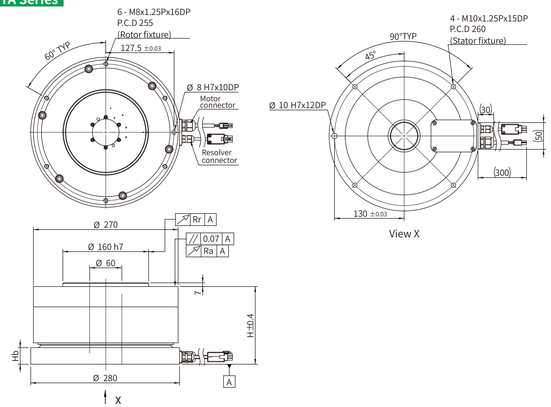

DMYA Series	Symbol	Unit	DMYA3-B0	DMYA5-B0	DMYAA-B0
Continuous torque	T_C	Nm	25	50	100
Continuous current	I_C	A_{rms}	2.2	2.2	4.4
Peak torque (Within 1s.)	T_P	Nm	75	150	300
Peak current (Within 1s.)	I_P	A_{rms}	6.6	6.6	13.2
Torque constant	K_t	Nm/A_{rms}	11.4	22.5	22.5
Electrical time constant	T_e	ms	11.3	12.8	13.3
Resistance (line to line at 25°C)	R_{25}	Ω	8.6	13.3	5.8
Inductance (line to line)	L	mH	97	170	77
Number of poles	2_p		22	22	22
Back emf constant (line to line)	K_v	$V_{rms}/(rad/s)$	6.6	13	13
Motor constant (line to line at 25°C)	K_m	$Nm/\sqrt{W}$	3.2	5	7.6
Thermal resistance	R_{th}	K/W	1.2	0.8	0.4
Nominal input voltage		V_{DC}	500(600[1])		
Inertia of rotating parts	J	kgm^2	0.254	0.32	0.44
Mass of motor	M_m	kg	45	54	71
Max. axial load	F_a	N	8000	8000	8000
Max. moment load	M	Nm	240	240	240
Max. speed		rpm	200	100	100
Resolution[1]		p/rev	1048576		
Repeatability		arc-sec	±5		
Accuracy		arc-sec	±25		
Axial runout	R_a	mm	0.03(0.005[1])		
Radial runout	R_r	mm	0.03(0.015[1])		
Height	H	mm	120	145	200
Height of base	H_b	mm	31		

Note: [1] Optional
* All the specifications in the table are in ±10% of tolerance except dimensions.

DMN71 Series

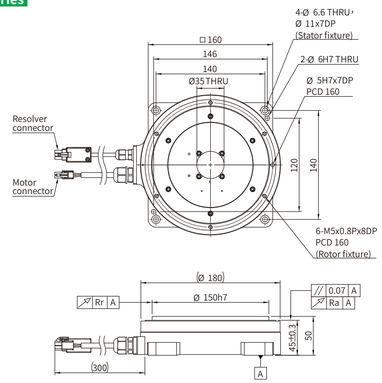

DMN Series	Symbol	Unit	DMN71-B0
Continuous torque	T_C	Nm	3.7
Continuous current	I_C	A_{rms}	3.4
Peak torque (Within 1s.)	T_P	Nm	11.1
Peak current (Within 1s.)	I_P	A_{rms}	10.2
Torque constant	K_t	Nm/A_{rms}	1.09
Electrical time constant	T_e	ms	3.5
Resistance (line to line at 25°C)	R_{25}	Ω	2.55
Inductance (line to line)	L	mH	9.02
Number of poles	2_p		16
Back emf constant (line to line)	K_v	$V_{rms}/(rad/s)$	0.63
Motor constant (line to line at 25°C)	K_m	$Nm/\sqrt{W}$	0.6
Thermal resistance	R_{th}	K/W	1.95
Nominal input voltage		V_{DC}	500(600[1])
Inertia of rotating parts	J	kgm^2	0.008
Mass of motor	M_m	kg	3.5
Max. axial load	F_a	N	1000
Max. moment load	M	Nm	50
Max. speed		rpm	600
Resolution		p/rev	1048576
Repeatability		arc-sec	±5
Accuracy		arc-sec	±30
Axial runout	R_a	mm	0.03(0.005[1])
Radial runout	R_r	mm	0.03(0.015[1])
Size	WxLxH	mm	160x160x50

Note: [1] Optional
* All the specifications in the table are in ±10% of tolerance except dimensions.

DMN93 Series

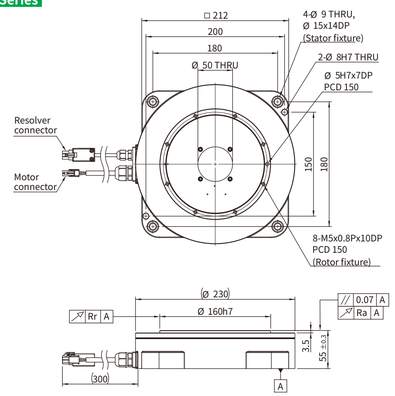

DMN Series	Symbol	Unit	DMN93-B0
Continuous torque	T_C	Nm	13.2
Continuous current	I_C	A_{rms}	3.4
Peak torque (Within 1s.)	T_P	Nm	39.6
Peak current (Within 1s.)	I_P	A_{rms}	10.2
Torque constant	K_t	Nm/A_{rms}	3.9
Electrical time constant	T_e	ms	5.4
Resistance (line to line at 25°C)	R_{25}	Ω	4.3
Inductance (line to line)	L	mH	23.2
Number of poles	2_p		22
Back emf constant (line to line)	K_v	$V_{rms}/(rad/s)$	2.25
Motor constant (line to line at 25°C)	K_m	$Nm/\sqrt{W}$	1.5
Thermal resistance	R_{th}	K/W	1.01
Nominal input voltage		V_{DC}	500(600[1])
Inertia of rotating parts	J	kgm^2	0.012
Mass of motor	M_m	kg	7.5
Max. axial load	F_a	N	1000
Max. moment load	M	Nm	50
Max. speed		rpm	500
Resolution		p/rev	1048576
Repeatability		arc-sec	±5
Accuracy		arc-sec	±25
Axial runout	R_a	mm	0.03(0.005[1])
Radial runout	R_r	mm	0.03(0.015[1])
Size	WxLxH	mm	212x212x55

Note: [1] Optional
* All the specifications in the table are in ±10% of tolerance except dimensions.